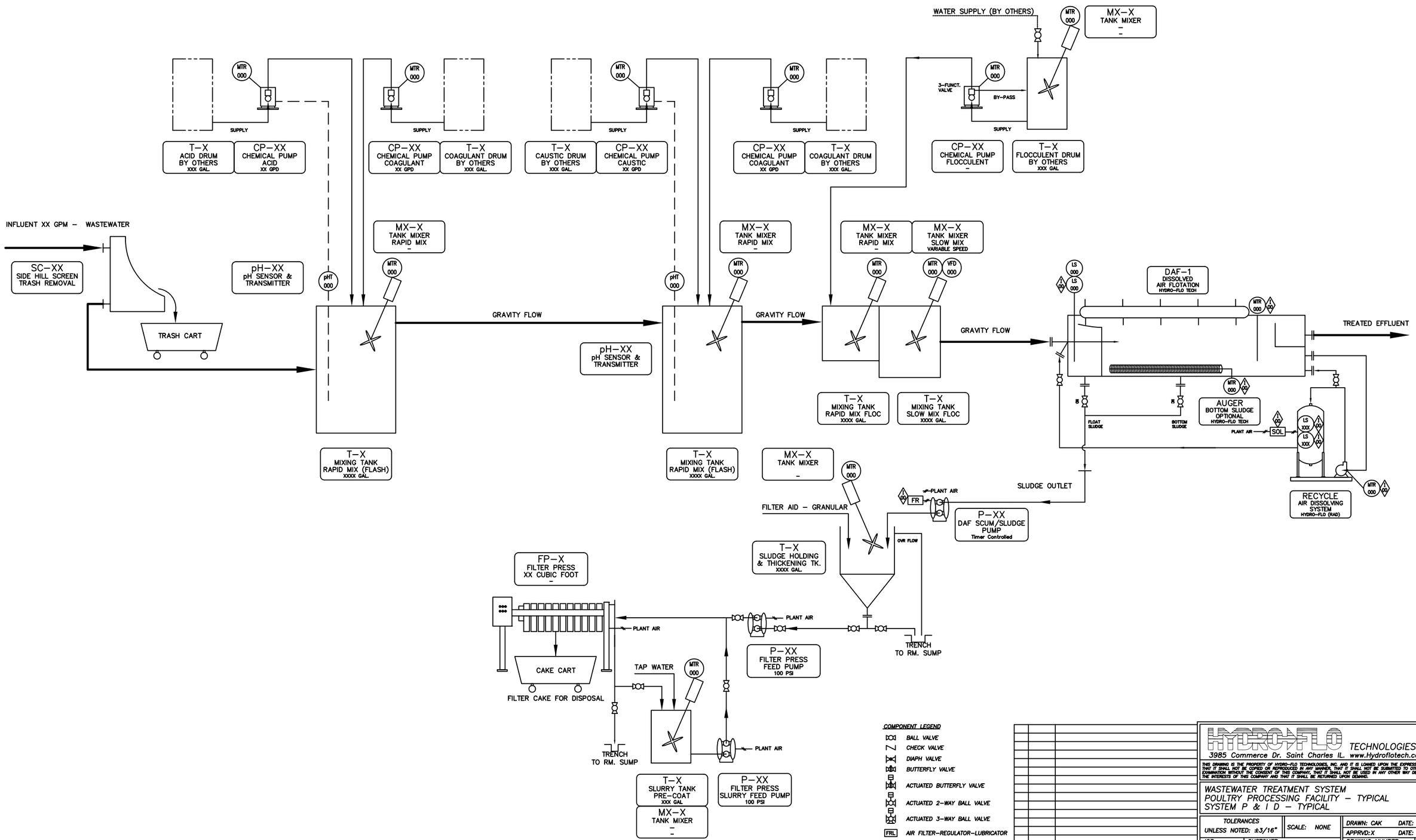
WATER SUPPLY (BY OTHERS)
MX–X
TANK MIXER
–
3–FUNCT. VALVE
BY–PASS
SUPPLY
T–X
ACID DRUM
BY OTHERS
XXX GAL.
CP–XX
CHEMICAL PUMP
ACID
XX GPD
CP–XX
CHEMICAL PUMP
COAGULANT
XX GPD
T–X
COAGULANT DRUM
BY OTHERS
XXX GAL.
T–X
CAUSTIC DRUM
BY OTHERS
XXX GAL.
CP–XX
CHEMICAL PUMP
CAUSTIC
XX GPD
CP–XX
CHEMICAL PUMP
COAGULANT
XX GPD
T–X
COAGULANT DRUM
BY OTHERS
XXX GAL
CP–XX
CHEMICAL PUMP
FLOCCULENT
–
T–X
FLOCCULENT DRUM
BY OTHERS
XXX GAL
INFLUENT XX GPM – WASTEWATER
SC–XX
SIDE HILL SCREEN
TRASH REMOVAL
TRASH CART
pH–XX
pH SENSOR &
TRANSMITTER
MX–X
TANK MIXER
RAPID MIX
–
GRAVITY FLOW
MX–X
TANK MIXER
SLOW MIX
VARIABLE SPEED
DAF–1
DISSOLVED
AIR FLOTATION
HYDRO–FLO TECH
TREATED EFFLUENT
T–X
MIXING TANK
RAPID MIX (FLASH)
XXXX GAL.
T–X
MIXING TANK
RAPID MIX FLOC
XXXX GAL.
T–X
MIXING TANK
SLOW MIX FLOC
XXXX GAL.
AUGER
BOTTOM SLUDGE
OPTIONAL
HYDRO–FLO TECH
FLOAT SLUDGE
BOTTOM SLUDGE
PLANT AIR
SOL
RECYCLE
AIR DISSOLVING
SYSTEM
HYDRO–FLO (RAD)
SLUDGE OUTLET
P–XX
DAF SCUM/SLUDGE
PUMP
Timer Controlled
FILTER AID – GRANULAR
T–X
SLUDGE HOLDING
& THICKENING TK.
XXXX GAL.
OVR FLOW
FP–X
FILTER PRESS
XX CUBIC FOOT
–
CAKE CART
FILTER CAKE FOR DISPOSAL
TAP WATER
TRENCH
TO RM. SUMP
P–XX
FILTER PRESS
FEED PUMP
100 PSI
T–X
SLURRY TANK
PRE–COAT
XXX GAL
MX–X
TANK MIXER
–
P–XX
FILTER PRESS
SLURRY FEED PUMP
100 PSI
COMPONENT LEGEND
BALL VALVE
CHECK VALVE
DIAPH VALVE
BUTTERFLY VALVE
ACTUATED BUTTERFLY VALVE
ACTUATED 2–WAY BALL VALVE
ACTUATED 3–WAY BALL VALVE
AIR FILTER–REGULATOR–LUBRICATOR
TIMER – ON/OFF
REV DATE CHANGES
X XX–XX–XX XX
HYDROFLO TECHNOLOGIES INC.
3985 Commerce Dr. Saint Charles IL. www.Hydroflotech.com
THIS DRAWING IS THE PROPERTY OF HYDRO–FLO TECHNOLOGIES, INC. AND IT IS LOANED UPON THE EXPRESS CONDITION THAT IT SHALL NOT BE COPIED OR REPRODUCED IN ANY MANNER, THAT IT SHALL NOT BE SUBMITTED TO OTHERS FOR EXAMINATION WITHOUT THE CONSENT OF THIS COMPANY, THAT IT SHALL NOT BE USED IN ANY OTHER WAY DETRIMENTAL TO THE INTERESTS OF THIS COMPANY AND THAT IT SHALL BE RETURNED UPON DEMAND.
WASTEWATER TREATMENT SYSTEM
POULTRY PROCESSING FACILITY – TYPICAL
SYSTEM P & I D – TYPICAL
TOLERANCES
UNLESS NOTED: ±3/16"
SCALE: NONE
DRAWN: CAK DATE: XX.XX.XX
APPRVD: X DATE: X
JOB CUSTOMER
PROP XX
DRAWING NUMBER
XX–XXX PID
SHT NO:
X OF X