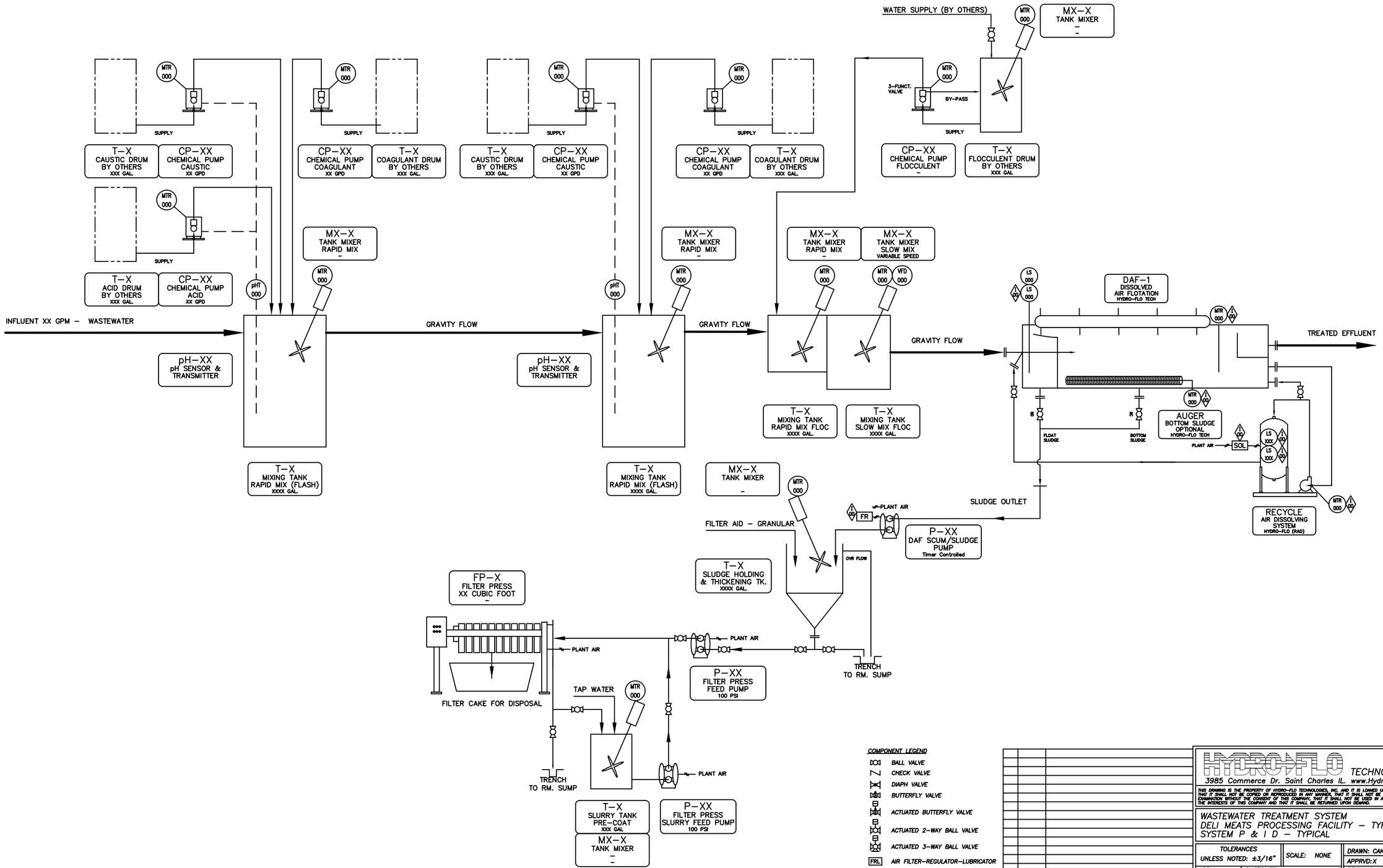
WATER SUPPLY (BY OTHERS)
MX–X
TANK MIXER
–
3–FUNCT. VALVE
BY–PASS
SUPPLY
T–X
CAUSTIC DRUM
BY OTHERS
XXX GAL.
CP–XX
CHEMICAL PUMP
CAUSTIC
XX GPD
CP–XX
CHEMICAL PUMP
COAGULANT
XX GPD
T–X
COAGULANT DRUM
BY OTHERS
XXX GAL.
CP–XX
CHEMICAL PUMP
FLOCCULENT
–
T–X
FLOCCULENT DRUM
BY OTHERS
XXX GAL
T–X
ACID DRUM
BY OTHERS
XXX GAL.
CP–XX
CHEMICAL PUMP
ACID
XX GPD
MX–X
TANK MIXER
RAPID MIX
–
MX–X
TANK MIXER
SLOW MIX
VARIABLE SPEED
VFD
INFLUENT XX GPM – WASTEWATER
GRAVITY FLOW
pH–XX
pH SENSOR &
TRANSMITTER
T–X
MIXING TANK
RAPID MIX (FLASH)
XXXX GAL.
T–X
MIXING TANK
RAPID MIX FLOC
XXXX GAL.
T–X
MIXING TANK
SLOW MIX FLOC
XXXX GAL.
DAF–1
DISSOLVED
AIR FLOTATION
HYDRO–FLO TECH
TREATED EFFLUENT
FLOAT SLUDGE
BOTTOM SLUDGE
AUGER
BOTTOM SLUDGE
OPTIONAL
HYDRO–FLO TECH
PLANT AIR
SOL
RECYCLE
AIR DISSOLVING
SYSTEM
HYDRO–FLO (RAD)
SLUDGE OUTLET
FR
P–XX
DAF SCUM/SLUDGE
PUMP
Timer Controlled
FILTER AID – GRANULAR
T–X
SLUDGE HOLDING
& THICKENING TK.
XXXX GAL.
OVR FLOW
FP–X
FILTER PRESS
XX CUBIC FOOT
–
FILTER CAKE FOR DISPOSAL
P–XX
FILTER PRESS
FEED PUMP
100 PSI
TRENCH
TO RM. SUMP
TAP WATER
T–X
SLURRY TANK
PRE–COAT
XXX GAL
P–XX
FILTER PRESS
SLURRY FEED PUMP
100 PSI
COMPONENT LEGEND
BALL VALVE
CHECK VALVE
DIAPH VALVE
BUTTERFLY VALVE
ACTUATED BUTTERFLY VALVE
ACTUATED 2–WAY BALL VALVE
ACTUATED 3–WAY BALL VALVE
FRL AIR FILTER–REGULATOR–LUBRICATOR
TMR TIMER – ON/OFF
REV DATE CHANGES
X XX–XX–XX XX
HYDRO-FLO TECHNOLOGIES INC.
3985 Commerce Dr. Saint Charles IL. www.Hydroflotech.com
THIS DRAWING IS THE PROPERTY OF HYDRO–FLO TECHNOLOGIES, INC. AND IT IS LOANED UPON THE EXPRESS CONDITION THAT IT SHALL NOT BE COPIED OR REPRODUCED IN ANY MANNER, THAT IT SHALL NOT BE SUBMITTED TO OTHERS FOR EXAMINATION WITHOUT THE CONSENT OF THIS COMPANY, THAT IT SHALL NOT BE USED IN ANY OTHER WAY DETRIMENTAL TO THE INTERESTS OF THIS COMPANY AND THAT IT SHALL BE RETURNED UPON DEMAND.
WASTEWATER TREATMENT SYSTEM
DELI MEATS PROCESSING FACILITY – TYPICAL
SYSTEM P & I D – TYPICAL
TOLERANCES
UNLESS NOTED: ±3/16"
SCALE: NONE
DRAWN: CAK DATE: XX.XX.XX
APPRVD: X DATE: X
JOB CUSTOMER
PROP XX
DRAWING NUMBER SHT NO:
XX–XXX PID X OF X